Development and Realization of the Microsystem for Energy-Saving Food Storage MIZEL

Grassnick, R. and Tränkler, H.-R.*, Geissler, C.**, Heinze, M.***

*Institute for Measurement and Automation Technology (IMA)
Bundeswehr University Munich
85577 Neubiberg, Germany
Phone: +49 89/6004-3740 Fax.: +49 89/6004-2557
E-mail: ralf.grassnick@unibw-muenchen.de
**Indatec GmbH, 83233 Bernau, Germany
***Infra Tec GmbH, 01217 Dresden, Germany

Abstract

A prototype of an advanced food storage system for private households has been developed and realized. It is used in order to validate experiments, which acknowledge the fact that food remain fresh, if it is stored at certain humidity values. The design, development, and realization of the food container took place in several steps: the fundamental studies at an experimental model with a PC development environment by the IMA, the upgrading in surface mounted technology (SMT) by the indatec GmbH, the upgrading in micro system technology (MST) by the infratec GmbH, and the test of the total system by the IMA.
To make the system energy-autonomous, it is supplied by solar cells. Due to the fact that the system is dependent on light a special power management and an energy-saving control algorithm have been designed and low power consuming components have been used.
The air humidity inside the container can be changed by opening and closing a ventilation flap actuator. A capacity sensor is used for the measurement of the air humidity. The measurement of the temperature by a thermistor (NTC) serves the compensation of the temperature dependence of this humidity sensor. The signals of both sensors are converted by a switched-capacitor interface. The frequency signals produced this way, which are proportional to air humidity and to temperature respectively are fed back to a microcontroller. Using these signals, the exact humidity in the container is calculated and compared with the desired humidity. The difference signal operates a controller that positions the ventilation flap on the front of the container.
The SMT version of the power management and the sensor-actuator-interface as well as a MST component, which includes the sensors and the signal processing hardware around the microcontroller, are closer regarded and explained in detail.

1 Introduction

In order to control the humidity a manual rhythm of changing storage conditions could be used. One buys a fresh loaf of bread for example, leaves it uncovered for half a day, puts it in a plastic bag afterwards, and exchanges this bag frequently to preened mould. This bread is stored at roughly constant ambient humidity and will be eatable for these days. But, what happens if one forgets the exchange or is absent for several days? Commercial bread containers made of high-grade steel, wood, or tone can undertake this task. However, they are subject to seasonal fluctuations. A tone pot for example enables a mould-free storage at dry ambient air in the winter, whereas mould already occurs after few days at higher relative humidity in the summer.[1]

An optimal food storage would be possible by using the advantages of the manual store rhythm and avoiding the disadvantages of commercial food containers. MIZEL is the realization of this idea. At room temperature the humidity inside the MIZEL can be kept roughly constant by operating a ventilation flap actuator.

To become a success on the consumer market such a home appliance must be durable, easily operated, energy-saving, reasonably priced, and last but not least, needs to be well marketed, in order to convince potential customers of the usefulness.

This paper discusses the development and describes the realization of the MIZEL. Section 2 specifies the measurement of relative humidity, temperature, and voltage. To make the system energy-autonomous and energy-saving respectively, it is supplied by solar cells that are attached on the top of the container. The power management and the connection between power management and the measurement circuit are illustrated in Section 3. To make the system reasonably priced and small in size MST should be used. As an example the measurement circuit and the signal processing hardware have been realized in MST. Section 4 deals with the MST implementation. Section 5 describes the assembly of hardware and software components in a prototype. Section 6 gives the discussion and the conclusions.

2 Measurement circuit

The decisive system variables are the humidity, the temperature, and the voltage of the solar cells. Figure 1 shows the wiring diagram for the measurement of these values.

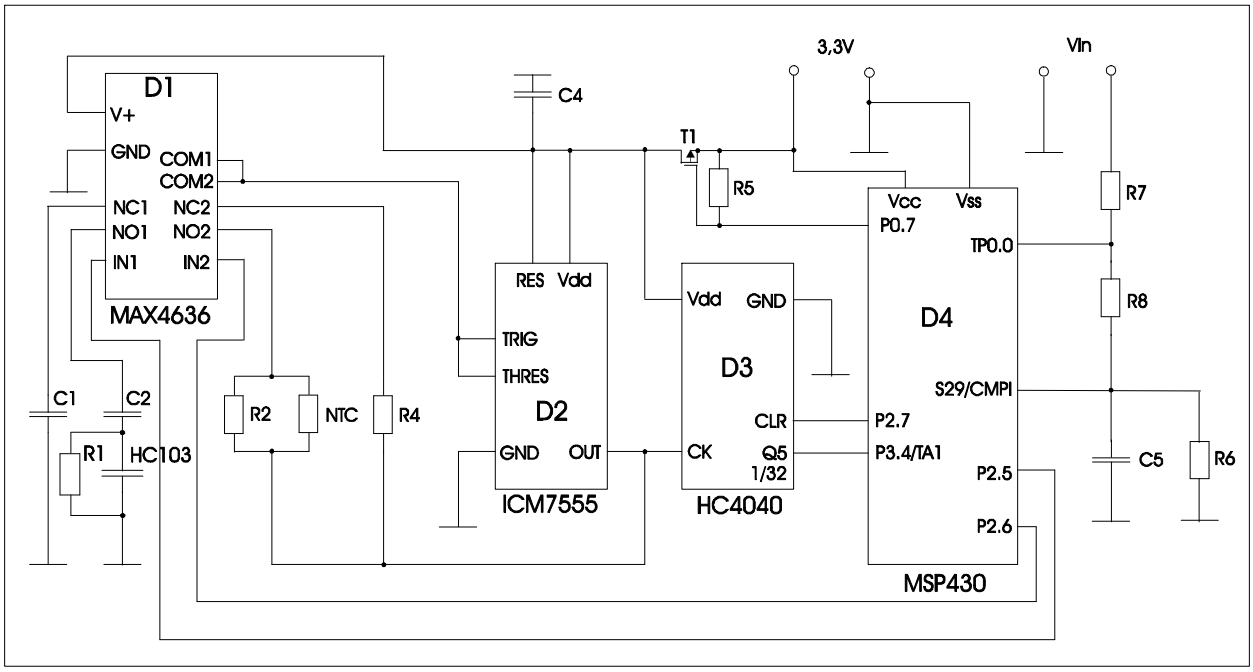

Figure 1 Wiring diagram for the measurement of humidity, temperature, and supply voltage

The discharging time of RC-circuits is measured in order to convert the signals of the capacity humidity sensor [2] and the NTC temperature sensor into frequency signals. Therefore, the principle of switched capacitors and switched resistors respectively is used. The frequency signals are evaluate with a microcontroller. The signal preprocessing for humidity and temperature can be switched of in order to save energy between the measurements. The voltage of the solar cells is measured by using a RC-circuit and the supply voltage as a reference [3], which is controlled by a switching DC/DC converter.

3 Power management and packaging

The electronic system consists of the low power / low voltage microcontroller MSP430 [4], some glue logic, switching DC/DC converters, peripheral circuits like H-bridges for the actuator and analogue circuitry for the sensors. The following describes the circuit and the efforts in miniaturization of the device for indented industrial production.

3.1 Power management

The system is intended to be energy-autonomous thus supplied by solar cells [5] operating down to 100 lux. The energy is stored in double layer capacitors (gold caps) of very high capacitance having no memory effects like NiCd-batteries capable of delivering high currents. As the voltage across the solar cells varies with intensity of light stabilization is inevitable. The voltage necessary for the controller and

affiliated electronics as well as for the sensors and the actuator is uniform 3.3 V. The voltage regulators used in the application are coil-less switchers [6] operating from 1,6 V to 3,6 V input delivering output current up to 100 mA at a maximum rate of 90 %. To decouple the effect of motor current spikes form the supply of the electronics two independent switchers are provided. Further to reduce all over power consumption the controller can be driven in different low-power modes, the LC-display as well as the analogue circuitry can be switched off. So the power consumption is only depended on the control algorithm because the sensors are drawing current only when activated. The controller is available in EPROM, OTP, or ROM version, the latter type reduces power consumption by an order of magnitude.

3.2 Packaging

As the microcontroller can be supplied with EPROM or OTP the existing experimental PCB in SMT (Figure 2) is laid out to enable plastic QFP-housing to be soldered directly to the component side as well as the use of a socket for ceramic QFP-housing with quartz window for erasing.

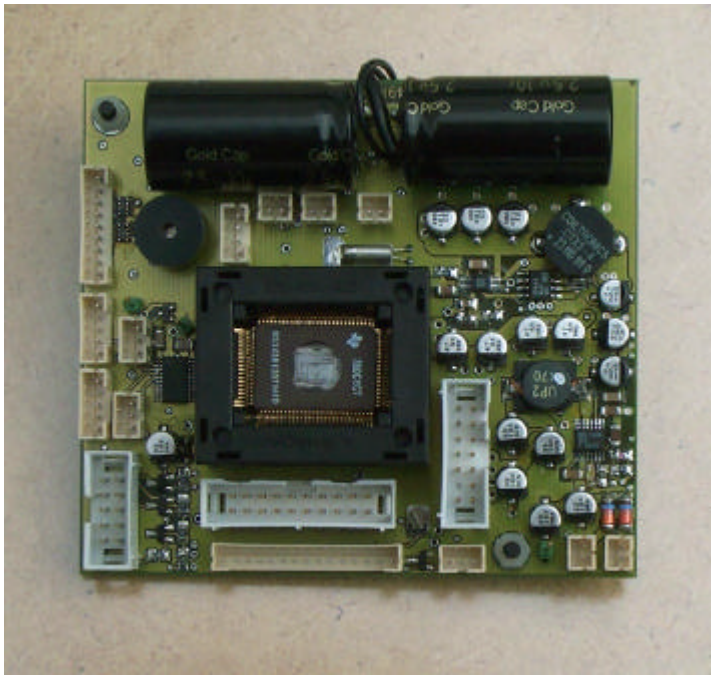

Figure 2 Electronics on a PCB in SMT

Moreover, a chip-on-board approach with MST on one side and conventional components on the other side of a 4 to 6-layer PCB is proposed. This is an example within the scope of the project. A complete solution in MST has been avoided deliberately.

To solve the problem of changing software during development process having OTP components only a stacked type of PCBs with SMT one-piece interface connectors with narrow pitch will be provided. The smaller PCB carries the controller to be changed separately without the need of connectors on it, as only gold plated contact strips are provided.

At the end of the development process and the beginning of mass production a change to a less complex but mask-programmed low-power controller of the same family could be commercially necessary.

4 MST implementation

A major task of the project was the minimizing of the layout of the controller assembly according to the requirements of high quantity production, usage of economical materials / procedures, and environmental aspects. To reach the required miniaturization it is necessary to use as far as possible more small style and complex non-housed components instead of housed.

The bare dies could be assembled by wire bonding or flip chip technology. While the Flip-Chip process shows the advantages only in the range of production of very high quantities with millions of units in combination with extreme miniaturization (example: chip cards, portable consumer electronic like digital camcorder), in the stage of research and development the flexibility of wire bonding has higher importance. Low temperature technologies were used (<90°C) to minimize the efforts and the substrate price, together with high ecological compatibility (Figure 3).

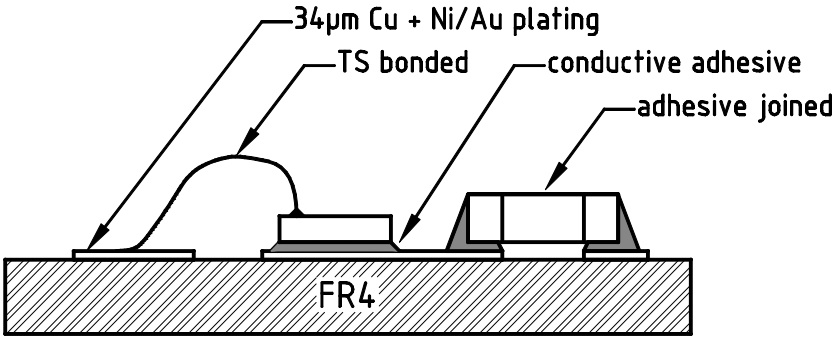

Figure 3 Used technologies at a glance

The availability of SMD components with gold or silver-palladium metallization makes it possible to assemble with conductive adhesives, to apply low temperature substrates, and to avoid soldering processes which are not environmental friendly in the case of tin/lead solder or which are still under development now in the case of lead-free solders.

For wire bonding at low temperatures (or consequently at room temperature without heat supply) in case of COB or COF technology (“chip on board”, “chip on foil”) the aluminum wire bonding (wedge/wedge) or the gold wire bonding (ball/wedge) with high transducer frequencies is recommended. Except the avoidance of heat load the wire bonding at room temperature is also interesting because of the problems with heating at complex structures or 3-dimensional wiring. Consequently the ball/wedge bonding (Figure 4) was preferred because of the higher throughput compared with wedge/wedge bonding.

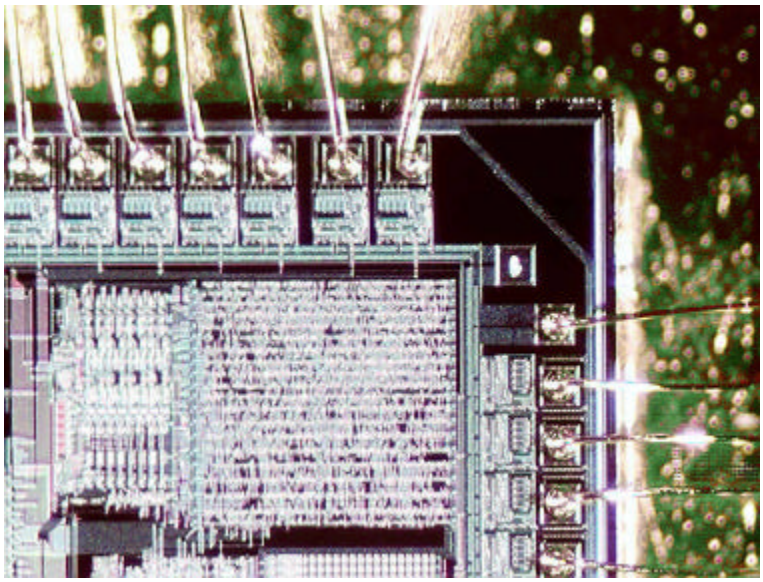

Figure 5 Controller chip, bonded at room temperature

The gold wire bonding using frequencies higher than the today’s standard of 60-120 kHz yields considerable advantages. However, because of the limited propagation of this technology additional research will be necessary. The following facts could be found out or known results were verified during the project:

1. To minimize the temperature and bonding time the ultrasonic frequency should be more than 200 kHz.
2. The often-expected limitation of the bonding parameters (force, time, power) does not occur. The possible variation range of bonding parameters is increased and improves the possibility of adaptation to different substrates. Especially at bonding on pads, which can be bonded also without problems with standard frequencies, the usable range of the bonding parameters increases.
3. Under the conditions of manual TS bonding the variation in shear strength of ball bonds on Si-chips with aluminum pad metallization reaches typically 6 %.
4. With high frequency ultrasonic systems it is often not only possible, but also necessary to decrease the bonding time at the ball bond down to less than 10 ms. For the wedge bond the higher frequency oscillation shows no advantages regarding bonding time.
5. Because of the employment of the high frequency transducers the dominant influence of substrate temperature as a bonding parameter will be reduced. Mostly the ball/wedge bonding will be possible at room temperature. In all other cases a temperature of 50 °C was sufficient.
6. Working with a manual wire bonder with 30 µm Au wire, a minimal bond force of 50 cN is realizable.
7. It was proved at selected examples that ball and wedge bonds with high strength and reliability could be achieved on pads, which are not bondable under normal conditions with standard frequencies.
8. Often standard Au bond wires could not longer used because of the higher stress at higher US frequencies. It is useful to use higher doped or alloyed wires, which show higher breaking load. Depending on the type of wire winding can cause problems at loop forming caused of the higher elasticity and lower plasticity resulting in inner wire tensions, which could not be completely reduced.
9. The choice of capillaries, clamping length and conditions becomes more important for high frequency transducers. This effect will be increased at room temperature. The influence of temperature as a component of binding process is dropped and the complete necessary binding energy for bonding has to bring in as mechanical energy. Variation of the conditions of ultrasonic generation, transformation and introduction causes significant changes in bonding conditions.
10. Although the complete binding energy at room temperature bonding has to be introduced by the high frequency ultrasonic, there are indications about the reduction not only of thermal but mechanical load of the substrates.
11. The wide range of bonding parameters makes often possible to use the same type of bonding wire, capillaries and bonding parameters with different substrate/pad combinations. This results in high advantage in throughput and avoidance of subjective mistakes at bonding of assemblies with different components with manual wire bonder.

The investigations show the applicability of wire bonding of different substrates with the high frequency technology. Parts of this are thick films, FR4 with flash or galvanic gold, and silicon chips with aluminum bonding pads.

In conjunction with the well-controlled adhesive joining technology of surface mounted devices the preconditions of the assembly of miniaturized prototypes and devices are given.

5 Prototype

A Prototype (Figure 5) has been designed and built using the experiences from the measurements on the experimental model that yield the position of the sensors and the position and size of the actuator. It comprises the sensors, a display and a keypad, the power management of the integrated power supply (solar cells), the signal processing and a control with the low power microcontroller, and the actuator. A 20-character alphanumerical LC-display module and a 4-button keypad form the user interface. Both serve to select specific programs for different types of food. As the ventilation flap can be driven alternatively either by a DC- or a stepper-motor two H-bridges consisting of low R_{DSON} FETs are implemented. Mentioned above the motors have their own voltage regulator to prevent disturbance of the other components during motor start and stop. The position of the flap and the container lid are detected by reed-switches. Electronic sensors are impractical because of their power consumption.

Decisive component of the system is the low power microcontroller. It is used to detect the frequency signals, which are proportional to relative humidity and temperature, to measure the supply voltage, to handle the control algorithm, to position the ventilation flap actuator, and to supervise the man machine interface MMI [7].

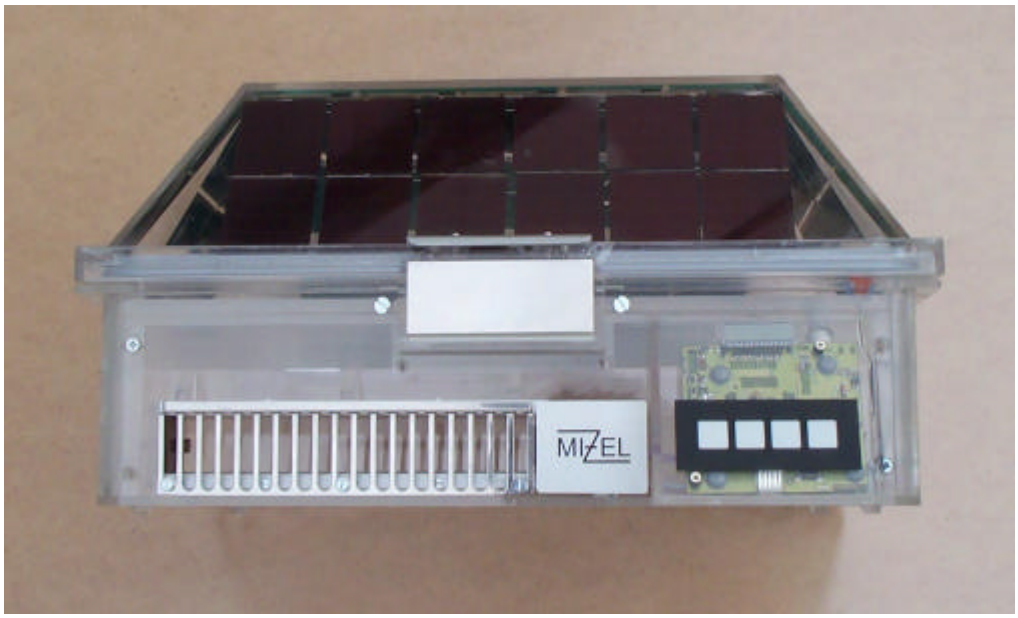

Figure 5 Prototype of the food container

6 Conclusions

The several steps of development and realization of the MIZEL have been discussed. High attention has been paid to the energy saving. A special signal preprocessing has been designed in order to measure the decisive system variables humidity, temperature, and voltage economically. Energy-saving components and technologies has been implemented, like a low power microcontroller and micro system technology (MST) respectively.

The upgrades in surface mounted technology (SMT) and in MST has been illustrated. As an example within the scope of the project, a chip-on-board approach with MST on one side and conventional components on the other side of a 4 to 6-layer PCB has been proposed.

Extensive test series for wire bonding at room temperature has been carried out. The investigations has been shown the applicability of wire bonding of different substrates with the high frequency technology. Parts of this are thick films, FR4 with flash or galvanic gold, and silicon chips with aluminum bonding pads. In conjunction with the well-controlled adhesive joining technology of surface mounted devices the preconditions of the assembly of miniaturized prototypes and devices are given.

The prototype of the MIZEL has been described. It provides the opportunity to show the correctness of the theoretical model approach, to verify the control algorithm, and to check the autarky in real world experiments.

Acknowledgements

This work is supported by the German ministry of research (BMBF) under Grant 16SV786/8.

References

[1] Lohse, T, Tränkler, H.-R..: Idea and Concept of the Microsystem for Energy-Saving Food Storage MIZEL. to appear at Sensor 2001.
[2] E+E elektronik: humidity sensor HC103 (bare chip), data sheet.
[3] Bierl, L.: Economic Voltage Measurement With the MSP430 Family, Application Report. Texas Instruments 1999
[4] Texas Instruments: MSP430E(P)337, data sheet.
[5] ASE: ASI-OEM-Solarmodule für Indoor-Beleuchtung, data sheet.
[6] Texas Instruments: TPS60200DGS, data sheet.
[7] Grassnick, R., Tränkler H.-R.: Controller Design for the Energy-Autonomous System MIZEL. to appear at Sensor 2001.